Department of Electrical Engineering

College of Engineering

Salahaddin University-Erbil

Subject: Digital Signal Processing.

Course Book – *(2020-2021)*

Lecturer's name MSc, Maha George Zia

Academic Year: 2020/2021 (First Semester)

Course Book

1. Course name	**Digital Signal Processing**
2. Lecturer in charge	**Maha George Zia / Assistant Professor**
3. Department/ College	**Electrical Engineering/ College of Engineering**
4. Contact	**e-mail: maha.zia@su.edu.krd** **Tel: (optional)**
5. Time (in hours) per week	**For example Theory: 3** **Practical: -**
6. Office hours	**Sunday 11:0-12:0 , Monday 11:0-12:0**
7. Course code	**EE 4137**
8. Teacher's academic profile	**http://moodle.su.edu.krd/engineering/**
9. Keywords	**Signal processing, filter design, frequency spectrum**

10. Course overview:

The course deals with the fundamental principles of digital signal processing. This course is a mandatory requirement for the BSc in Electrical Engineering. It helps the students to analyse and design digital systems both in hardware and software requirements. This course aims to analysis and design of digital signals and systems concerning frequency response of signals, discrete Fourier transform, fast Fourier transform algorithm and applications, spectral estimation, and digital filter design and realization.

Every major point in the lecture illustrates with suitable examples. This will help the students in understanding the basic theory and train them in solving problems systematically and confidently and makes the understanding of this subject clearer and makes it more interesting. The illustrative examples give students an opportunity to have a wider expose and to develop problem –solving skills. At the end of each chapter students requires performing a test (quiz).

11. Course objective:

- Describe the structure of a digital signal processing system with the related areas and application
- Studying the sampling theorem and application of Shannon theory to a digital system.
- Explain signal reconstruction and effect of aliasing filtering.
- Explain the method of converting analogue signals to digital signals with the concept of digital signals and digital sequences.
- Study time scaling functions with up-sampling and down-sampling.
- Explain the difference equation and its application to a unit impulse response.
- Study discrete convolution and its types; linear and circular convolution and the relation between them.
- Describe the relation between analogue frequency and digital frequency; also study the response of a digital system to complex exponential sequence with sinusoidal sequence.
- Study the solution methods of difference equations using of Z-transform.

- Study the realization of digital filters using Z-transform: direct form I, direct form II, cascade realization and parallel realization.
- Explain the effect of Fourier transform on signal spectrum; amplitude, phase and power.
- Study the effect of windowing-FFT on spectral estimation.
- Explain digital filter types IIR and FIR with the methods of designing both of them.

12. Student's obligation

- Regular attendance is required according to the university rules.
- The use of mobile phone during the class is prohibited.
- Only the students who are officially enrolled can attend the class, guests are not admitted.
- Daily participation and conducting assignments are required.
- Homework and quizzes are done within this course

13. Forms of teaching

The lectures are designed to be an interactive naturalist. Students are expected to read in advanced the relevant sections and chapters from the essential text(s).

The lectures are expressed to students using data show and white board which is essential in writing equations, derivations of the roles and theorems.

The lectures are given to the students both electronically and in paper based format so that the student can return to these lectures when needed because these lectures contain also several solved examples and questions as well as homework's for the students.

14. Assessment scheme

The students are required to perform one closed book examination at the end of the first course, plus marks obtained after each chapter, so the marks will be as follows:

- Mid-term examination 20%
- Homework and quizzes tests 20%
- Annual average marks 40%
- Final examination 60%

15. Student learning outcome:

At the end of this course, students will be able to:

a) An ability to apply knowledge of mathematics, and science.
b) An ability to apply engineering ideas to solve practical problems.
c) An ability to use this outcome for real time systems.
d) An ability design and conduct experiments.
e) An ability to analyze and interpret data.

f) An ability to identify formulates and solves engineering problems.
g) An ability to analyze analog and digital systems.
h) An ability to design digital systems.

16. Course Reading List and References:

- **Key references:**
  - Jone G. Proakis: *Digital Signal Processing* , Principles algorithms and applications, 4th edition, Pearson, 2007
- **Useful references:**
  - Dick Blandford: *Introduction to Digital Signal Processing*, 1st edition, Pearson, 2012
  - Richard G. Lyons: *Understanding Digital Signal Processing*, 3rd Edition, Prentice Hall, 2010.
- **Magazines and review (internet):**

1. IEEE Signal Processing magazine
   http://ieeexplore.ieee.org/xpl/RecentIssue.jsp?punumber=79
2. Digital Signal Processing Journal
   https://www.journals.elsevier.com/digital-signal-processing/
3. Digital Signal Processing
   http://www.sciencedirect.com/science/journal/

17. The Topics:	Lecturer's name
	Maha George Zia ex: (3 hrs)
Week 1: Describe the basic concept of a DSP system with its block diagram.	11/10/2020
Week 2: Study Shannon sampling theory and the effect of sampling in frequency domain.	18/10/2020
Week 3: Study and analysis of a DSP system spectrum both in time and frequency domain.	25/10/2020
Week 4: Study various types of digital signals like impulse signal, unit step, exponential..etc with and without shifting . Also the time scaling of functions with up-sampling and down-sampling is described.	1/11/2020
Week 5: Study the difference equation and system representation using impulse response.	8/11/2020
Week 6: Study discrete convolution methods of linear and circular types.	15/11/2020

Week 7: Study the system response when the input signal is a complex exponential or sinusoidal sequence.	22/11/2020
Week 8: Study the solution methods of difference equations using of Z-transform.	29/11/2020
Week 9: Study the realization of digital filters using Z-transform: direct form I, direct form II, cascade realization and parallel realization.	6/12/2020
Week 10: Study DFT properties and IDFT. Also study FFT and IFFT using reduced decimation in frequency and reduced decimation in time methods.	13/12/2020
Week 11: Explain the effect of Fourier transform on signal spectrum; amplitude, phase and power.	20/12/2020
Week 12: Study the effect of window functions (like rectangular, triangular, Hamming, ..etc) on the spectral estimation.	27/12/2020
Week 13: An introduction of Digital Filters (IIR and FIR) is explained with the method of obtaining them using Z.T and F.T.	3/1/2021
Week 14: Study numerical method, and Bilinear method to design IIR filters.	10/1/2021
Week 15: study digital-to digital transformation method to design IIR filters.	17/1/2021
Week 16: Explain the methods and algorithm used for designing FIR digital filters.	24/1/2021
18. Practical Topics (If there is any)	
In this section The lecturer shall write titles of all practical topics he/she is going to give during the term. This also includes a brief description of the objectives of each topic, date and time of the lecture	Lecturer's name ex: (3-4 hrs) ex: 14/10/2020

19. Examinations:

Q1. Assuming a DSP system with a sampling time interval of 125 microseconds. Convert each of the following analog signals x(t) to the digital signal x(n).

1. $x(t) = 10e^{-5000t}u(t)$
2. $x(t) = 10\sin(2000\pi t)u(t)$

Solution:

1. $x(n) = x(nT) = 10e^{-5000\times 0.000125n}u(nT) = 10e^{-0.625n}u(n).$

2. $x(n) = x(nT) = 10\sin(2000\pi \times 0.000125n)u(nT) = 10\sin(0.25\pi n)u(n).$

Q2. A discrete time system has a unit sample response h(n)

h(n) = 0.5 δ(n) + δ(n – 1) + 0.5 δ(n – 2)

a) Find the system frequency response. Plot magnitude and phase.

b) Find the steady-state response of the system to x(n) = 5 cos (π n /4).

c) Find the steady-state response of the system to x(n) = 5 cos (3 π n /4).

Solution:

a) $H(e^{jW}) = \sum_{n=-\infty}^{\infty} h(n)\, e^{-jWn} = 0.5\, e^{-0} + e^{-jW} + 0.5\, e^{-j2W}$

$= e^{-jW}[\,0.5\, e^{jW} + 1 + 0.5\, e^{-jW}\,] = e^{-jW}(\,1 + \cos W\,)$

$|H(e^{jW})| = |\, e^{-jW}\,| \,.\, |(\,1 + \cos W\,)| = 1 + \cos W$

$\Phi(e^{jW}) = \tan^{-1}(e^{-jW}) + \tan^{-1}(1 + \cos W) = -W$

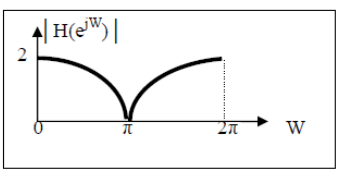

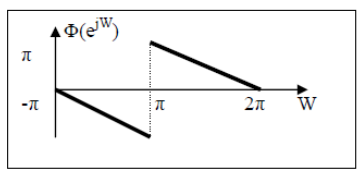

b)

$|H(e^{jW_o})| = |H(e^{j\pi/4})| = 1 + \cos(\pi/4) = 1.707$

$\Phi(e^{jW_o}) = -\pi/4$

Then $y(n) = 5\,(1.707)\cos[\,(n\pi/4) - (\pi/4)\,] = 8.535\cos[\pi(n-1)/4]$

c) $|H(e^{j3\pi/4})| = 1 + \cos(3\pi/4) = 0.2928$

$\Phi(e^{jW_o}) = -3\pi/4$

$y(n) = 5\,(0.2928)\cos[\,(n\pi/4) - (3\pi/4)\,] = 1.4644\cos[3\pi(n-1)/4]$

Q3. Solve $y(n) - (3/2)\, y(n-1) + (1/2)\, y(n-2) = (1/4)^n$, **if** $y(-1) = 4,\ y(-2) = 10$ for $n \geq 0$

Solution:

$$Y(Z) - \frac{3}{2}\{Y(Z).Z^{-1} + y(-1)\} + \frac{1}{2}\{Z^{-2}\, Y(Z) + Z^{-1}\, y(-1) + y(-2)\} = \frac{Z}{Z - \frac{1}{4}}$$

$$Y(Z)\{1 - \frac{3}{2}Z^{-1} + \frac{1}{2}Z^{-2}\} = \frac{Z}{Z - \frac{1}{4}} + 1 - 2Z^{-1}$$

$$Y(Z) = \frac{Z\,(2Z^2 - \frac{9}{4}Z + \frac{1}{2})}{(Z - \frac{1}{4})\,(Z - \frac{1}{2})\,(Z - 1)}$$

$$Y(Z) = \frac{(1/3)\,Z}{(Z - \frac{1}{4})} + \frac{Z}{Z - \frac{1}{2}} + \frac{(2/3)\,Z}{Z - 1}$$

$$y(n) = \{\frac{1}{3}(\frac{1}{4})^n + (\frac{1}{2})^n + \frac{2}{3}\}\, u(n)$$

Q4. Consider the sequence x(0) = 1, x(1) = 2, x(2) =3, and x(3) = 4, and given f_s = 100 Hz, T = 0.01 seconds, compute the amplitude spectrum, phase spectrum, and power spectrum using the triangular window function.

Solution:

a) **Since N = 4**

$$w_{tri}(0) = 1 - \frac{|2 \times 0 - 4 + 1|}{4 - 1} = 0$$

$$w_{tri}(1) = 1 - \frac{|2 \times 1 - 4 + 1|}{4 - 1} = 0.6667.$$

Similarly, $w_{tri}(2) = 0.6667$, $w_{tri}(3) = 0$. Then:

$$x_w(0) = x(0) \times w_{tri}(0) = 1 \times 0 = 0$$
$$x_w(1) = x(1) \times w_{tri}(1) = 2 \times 0.6667 = 1.3334$$
$$x_w(2) = x(2) \times w_{tri}(2) = 3 \times 0.6667 = 2$$
$$x_w(3) = x(3) \times w_{tri}(3) = 4 \times 0 = 0.$$

Applying DFT Equation below to $x_w(n)$ for k = 0, 1, 2, 3, respectively:

$$X(k) = x_w(0)\,W_4^{k\times 0} + x(1)\,W_4^{k\times 1} + x(2)\,W_4^{k\times 2} + x(3)\,W_4^{k\times 3}.$$

Then:

X(0) = 3.3334, X(1) = -2-j 1.3334, X(2) = 0.6666 , X(3)= -2+j 1.3334

$$\Delta f = \frac{1}{NT} = \frac{1}{4 \cdot 0.01} = 25\text{Hz}$$

$$A_0 = \frac{1}{4}|X(0)| = 0.8334,\ \varphi_0 = \tan^{-1}\left(\frac{0}{3.3334}\right) = 0^0,$$

$$P_0 = \frac{1}{4^2}|X(0)|^2 = 0.6954$$

$$A_1 = \frac{1}{4}|X(1)| = 0.6009,\ \varphi_1 = \tan^{-1}\left(\frac{-1.3334}{-2}\right) = -146.31^0,$$

$$P_1 = \frac{1}{4^2}|X(1)|^2 = 0.3611$$

Similarly

K	A_K	Φ_K *in degree*	P_K
1	0.6009	− 146.31	0.3611
2	0.1667	0	0.0278
3	0.6009	146.31	0.3611

Q5. Design and realize a digital low-pass filter using bilinear transformation method to satisfy the following characteristics (c/cs):

1. **− 3.01 dB cutoff frequency of 0.5 π rad**
2. **Magnitude down at least 15 dB at 0.75 π rad.**

Solution:

$$\Omega_u = 2\tan\left(\frac{W_1}{2}\right) = 2\tan(0.5\pi/2) = 2$$

$$\Omega'_r = 2\tan\left(\frac{W_2}{2}\right) = 2\tan(0.75\pi/2) = 4.8282$$

$$n = \left\lceil \frac{\log_{10}\{(10^{-0.1k_1} - 1)/(10^{-0.1k_2} - 1)\}}{2\log_{10}(1/\Omega_r)} \right\rceil$$

$$n = \left\lceil \frac{\log_{10}\{(10^{3.01/10} - 1)/(10^{15/10} - 1)\}}{2\log_{10}(2/4.8282)} \right\rceil = \lceil 1.9412 \rceil = 2$$

$$\Omega_c = 2/(10^{3.01/10} - 1)^{1/4} = 2 \quad rad/\sec$$

using LP → LP transformation:

$$H_a(S) = \frac{1}{S^2 + \sqrt{2}\,S + 1}\Big|_{S \to S/2} = \frac{4}{S^2 + 2\sqrt{2}\,S + 4}$$

$$H(Z) = \frac{4}{\left[\frac{2(1-Z^{-1})}{(1+Z^{-1})}\right]^2 + 2\sqrt{2}\left[\frac{2(1-Z^{-1})}{(1+Z^{-1})}\right] + 4} = \frac{1+2Z^{-1}+Z^{-2}}{3.4142135 + 0.5857865\,Z^{-2}}$$

$$y(n) = 0.2928932\ \{\ x(n) + 2\ x(n-1) + x(n-2)\ \} - 0.1715729\ y(n-2)$$

Q6. Given a second-order transfer function

$$H(z) = \frac{0.5(1-z^{-2})}{1+1.3z^{-1}+0.36z^{-2}},$$

Perform the filter realizations and write the difference equations using the following realizations:

1. **direct form I and direct form II**
2. **cascade form via the first-order sections**
3. **parallel form via the first-order sections**

Solution:

1)

$$H(z) = \frac{0.5 - 0.5z^{-2}}{1+1.3z^{-1}+0.36z^{-2}}$$

$$y(n) = 0.5x(n) - 0.5x(n-2) - 1.3y(n-1) - 0.36y(n-2).$$

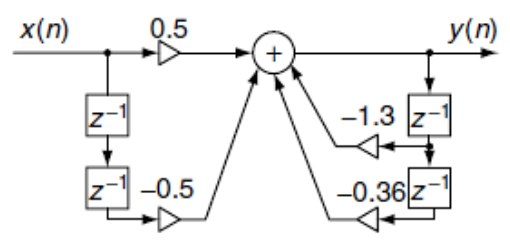

Direct form I

The difference equations for the direct-form II realization is

$$w(n) = x(n) - 1.3w(n-1) - 0.36w(n-2)$$
$$y(n) = 0.5w(n) - 0.5w(n-2).$$

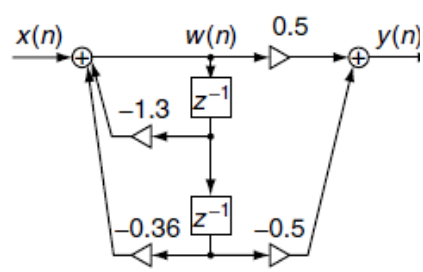

Direct form II

2)

$$H(z) = \frac{0.5(1-z^{-2})}{1+1.3z^{-1}+0.36z^{-2}} = \frac{0.5-0.5z^{-1}}{1+0.4z^{-1}}\,\frac{1+z^{-1}}{1+0.9z^{-1}}$$

$$w_1(n) = x(n) - 0.4w(n-1) \qquad \textbf{And} \qquad w_2(n) = y_1(n) - 0.9w_2(n-1)$$
$$y_1(n) = 0.5w_1(n) - 0.5w_1(n-1) \qquad y(n) = w_2(n) + w_2(n-1)$$

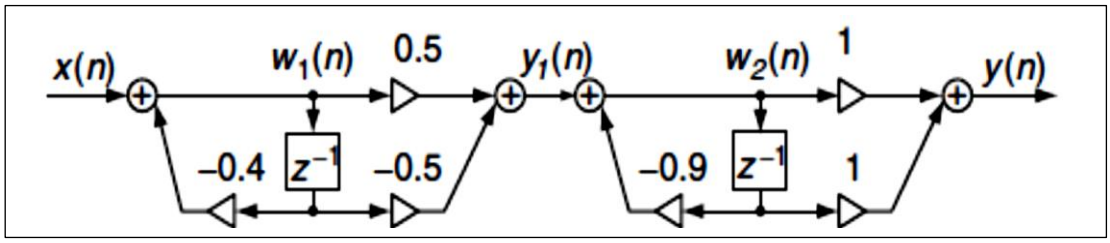

3)

$$\frac{H(z)}{z} = \frac{0.5(z^2-1)}{z(z+0.4)(z+0.9)} = \frac{A}{z} + \frac{B}{z+0.4} + \frac{C}{z+0.9},$$

$$H(z) = -1.39 + \frac{2.1z}{z+0.4} + \frac{-0.21z}{z+0.9} = -1.39 + \frac{2.1}{1+0.4z^{-1}} + \frac{-0.21}{1+0.9z^{-1}}.$$

$$y_1(n) = -1.39x(n)$$
$$w_2(n) = x(n) - 0.4w_2(n-1)$$
$$y_2(n) = 2.1w_2(n)$$
$$w_3(n) = x(n) - 0.9w_3(n-1)$$
$$y_3(n) = -0.21w_3(n)$$
$$y(n) = y_1(n) + y_2(n) + y_3(n).$$

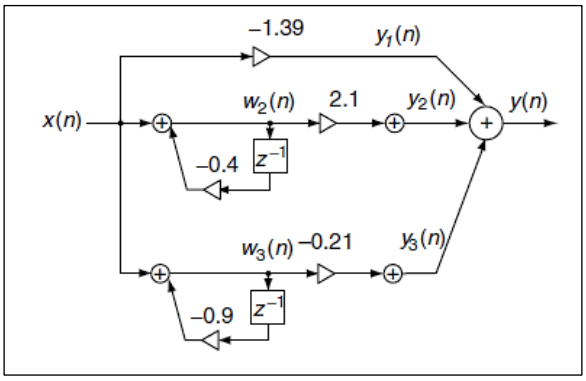

20. Extra notes:

Here the lecturer shall write any note or comment that is not covered in this template and he/she wishes to enrich the course book with his/her valuable remarks.

21. Peer review پێداچوونەوەی هاوەڵ

This course book has to be reviewed and signed by a peer. The peer approves the contents of your course book by writing few sentences in this section.

(A peer is person who has enough knowledge about the subject you are teaching, he/she has to be a professor, assistant professor, a lecturer or an expert in the field of your subject).

ئەم کۆرسبووکە دەبێت لەلایەن هاوەڵێکی ئەکادیمیەوە سەیر بکرێت و ناوەڕۆکی بابەتەکانی کۆرسەکە پەسەند بکات و جەند ووشەیەک بنووسێت لەسەر شیاوی ناوەڕۆکی کۆرسەکە و واژووی لەسەر بکات.

هاوەڵ ئەو کەسەیە کە زانیاری هەبێت لەسەر کۆرسەکە و دەبیت پلەی زانستی لە مامۆستا کەمتر نەبێت