Simulation of flow through pipe using ANSYS-Fluent

Research Project

Submitted to the department of water resources engineering in partial fulfillment of the requirement for the degree of BSc. in hydraulic engineering

By: Hawraz Hashm - Chawan Azad - Noora Saad - Marwa Shafiq

Supervised by:

Asst. Lect. Tara Haydar Aurahman

2021-2022

TABLE OF CONTENT

LIST OF TABLE

LIST OF FIGURE

Abstract

The simulations were done using ANSYS FLUENT CFD 17.0 software to observe pressure drops between inlet and outlet of a pipe. Pressure Difference and frictional coefficient were calculated using Darcy-Weisbach equation. The model used in ANSYS FLUENT CFD 17.2 is a three dimensional model through which different fluids were made to pass through and subsequent analysis were done. The project also includes comparison of results obtained from practical methods, theoretical methods and ANSYS. The flow is considered to be turbulent.

In this project , the frictional losses in a pipe due to shear stress produced in a pipe due to viscosity of fluids has been discussed. This project also contains flow analysis of different fluids in a pipe.

Keywords: frictional loss; frictional coefficient; viscous fluid; velocity profile

CHAPTER 1: INTRODUCTION

1.1 DEFINITION

Pipe network is very common in industries throughout the country, where fluid and gases are transported from one point to another. The pressure loss depends on the type of flow of the fluid in the network, pipe material, and the fluid flowing through the pipe. When any fluid flows through a pipe, the velocity adjacent to the pipe wall is zero and the velocity gradually increases from the wall. Maximum velocity is observed at the center of the pipe. Due to increase in the velocity gradient, shear stresses are produced in the fluid due to its viscosity. This viscous action attributes to loss of energy which is commonly known as loss due friction or frictional loss.

If losses are minimum in a pipe network then the efficiency is higher. Moreover, all networks should be designed to undergo minimum loss.

1.2 ENERGY LOSSES IN PIPE

When a fluid is flowing through a pipe, the fluid experiences resistance due to which it loses some energy. This energy loss can be classified as:

1. Major Losses

This is due to friction and is also termed as frictional loss.

2. Minor Losses

This is due to sudden expansion, contraction, pipe fittings, bend in pipe, obstruction in pipe etc.

1.3 MAJOR LOSSES OR FRICTION LOSSES

Friction loss is the loss of energy or “head” that occurs in pipe flow due to viscous effects generated by the surface of the pipe. Friction Loss is considered as a "major loss" and it is not to be confused with “minor loss” which includes energy lost due to obstructions. In mechanical systems such as internal combustion engines, it refers to the power lost overcoming the friction between two moving surfaces.

This energy drop is dependent on the wall shear stress (τ) between the fluid and pipe surface. The shear stress of a flow is also dependent on whether the flow is turbulent or laminar. For turbulent flow, the pressure drop is dependent on the roughness of the surface, while in laminar flow, the roughness effects of the wall are negligible. This is due to the fact that in turbulent flow, a thin viscous layer is formed near the pipe surface which causes a loss in energy, while in laminar flow, this viscous layer is non-existent.

Friction loss has several causes, including:

Frictional losses depend on the conditions of flow and the physical properties of the system.

- Movement of fluid molecules against each other.
- Movement of fluid molecules against the inside surface of a pipe or the like, particularly if the inside surface is rough, textured, or otherwise not smooth.
- Bends, kinks, and other sharp turns in hose or piping.

1.4 MINOR LOSSES

The additional components such as valves and bend add to the overall head loss of the system, which is turn alters the losses associated with the flow through the valves.

1.5 OBJECTIVES

The objective of the study is to compare frictional losses in a standard pipe using different pipe materials and fluids flowing through pipe. Following points represent the scope for this study.

- flows are considered to be turbulent.
- The pipe material used is Brass, Galvanized Iron and Stainless Steel.
- The fluids used are water, crude oil and diesel.

CHAPTER 2: THEORETICAL CONSIDERATION

2.1 GENERAL

In pipe flows the losses due to friction are of two kinds: skin-friction and form-friction. The former is due to the roughness of the inner part of the pipe where the fluid comes in contact with the pipe material, while the latter is due to obstructions present in the line of flow--perhaps a bend, control valve, or anything that changes the course of motion of the flowing fluid.

2.2 DARCY-WEISBACH FORMULA

One of the accepted methods to calculate friction losses resulting from fluid motion in pipes is by using the Darcy-Weisbach Equation. For a circular pipe:

Driving Equation of turbulent flow In Pipe:

Now we will assume two sections of pipe i.e.

section 1-1 and section 2-2.

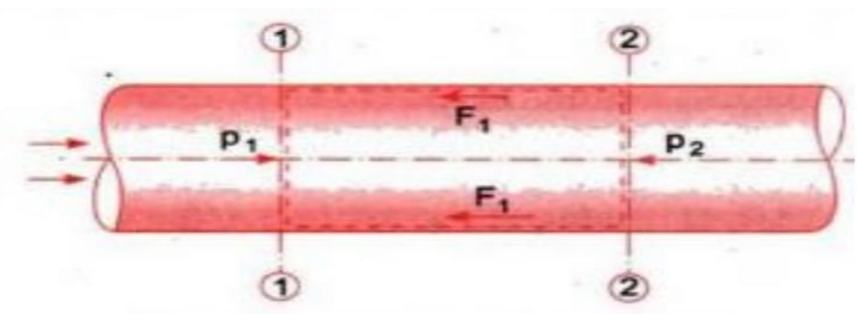

Let us consider the following terms to derive the required expression of loss of head due to friction in pipe.

P1 = Pressure intensity at section 1-1

V1 = Velocity of flow at section 1-1

P2 = Pressure intensity at section 2-2

V2 = Velocity of flow at section 2-2

L = Length of pipe between section 1-1 and section 2-2

f ' = Frictional resistance per unit wetted area per unit velocity

hf = Loss of head due to friction

A = Area of the pipe

D = Diameter of the pipe

Now we will apply the Bernoulli's equations between section 1-1 and section 2-2.

where:

$$\frac{P_1}{pg} + \frac{V_1^2}{2g} + z_1 = \frac{P_2}{pg} + \frac{V_2^2}{2g} + z_2 + h_f$$

$$\frac{P_1}{pg} = \frac{P_2}{pg} + h_f \;\; or \;\; h_f = \frac{P_1}{pg} + \frac{P_2}{pg}$$

Because,

Pipe is horizontal and hence, Z1 = Z2

Diameter of uniform pipe is same at both sections and hence, V1 = V2

Above equation of loss of head due to friction i.e. hf shows that there will be loss of head due to friction or intensity of pressure will be dropped in the direction of flow.

Frictional resistance = Frictional resistance per unit wetted area per unit velocity x wetted area x

Velocity2

F1 = f ' x πDL x V2

F1 = f ' x P x L x V2

Where,

P = Perimeter =πD

Now we will consider the forces acting on the fluid between section 1-1 and section 2-2

Pressure force at section 1-1 = P_1 x A

Pressure force at section 2-2 = P_2 x A

Let us write here the equation of equilibrium of forces

$$P_1A - P_2A - F_1 = 0$$

$$(P_1 - P_2)A = F_1 = f' \times P \times L \times V^2$$

$$P_1 - P_2 = \frac{f' \times P \times L \times V^2}{A}$$

$$pgh_f = \frac{f' \times P \times L \times V^2}{A}$$

$$h_f = \frac{f'}{pg} \times \frac{P}{A} \times L \times V^2$$

$$h_f = \frac{f'}{pg} \times \frac{4}{D} \times L \times V^2 = \frac{f'}{pg} \times \frac{4LV^2}{D}$$

$$h_f = \frac{4.f}{2g} . \frac{LV^2}{D} = \frac{4f.L.V^2}{D \times 2g}$$

Where,

P/A =πD / (πD^2/4)

P/A = 4/D

And

f '/ρg = f/2, where f will be called as co-efficient of friction

Above equation will be called as Darcy-Weisbach equation and commonly used to determine the loss of head due to friction in pipes.

There is one more expression of loss of head due to friction in pipes and this expression could be written as mentioned here.

hf = Head Loss due to friction, given in units of length

f = friction factor (Darcy-Weisbach friction coefficient)

L = Pipe Length

$$h_f = \frac{f.L.V^2}{D \times 2g}$$

hf = Head Loss due to friction, given in units of length

f = friction factor (Darcy-Weisbach friction coefficient)

L = Pipe Length

D= Pipe Diameter

V = Flow velocity

g = acceleration due to gravity

2.3 NUMERICAL THEORIES:

In this section the basic theory and implementations of numerical modeling for flow through pipe was explained. Numerical processes solved mathematical equations of fluid flow through the computational fluid dynamics (CFD). Using different computer codes, numerical modeling solved partial differential equations such as finite volume method. experimental data in the literature was studied numerically by FLUENT code interfaced on ANSYS V.17.2. The governing equation for fluid motion was named as Navier-Stokes. These equations are non-linear differential equations; therefore they admit a number of analytical solutions. Navier-Stokes equation consists of a continuity equation in which it's three dimensional forms for unsteady viscous fluid are presented by (Desai and Patil, 2015) as follows:

$$\frac{\partial u}{\partial t}+\frac{1}{V_F}\left(uA_x\frac{\partial u}{\partial x}+vA_y\frac{\partial u}{\partial y}+wA_z\frac{\partial u}{\partial z}\right)=-\frac{1}{\rho}\frac{\partial p}{\partial x}+G_x+f_x \quad \ldots\ldots\ldots 2.6$$

$$\frac{\partial v}{\partial t}+\frac{1}{V_F}\left(uA_x\frac{\partial v}{\partial x}+vA_y\frac{\partial v}{\partial y}+wA_z\frac{\partial v}{\partial z}\right)=-\frac{1}{\rho}\frac{\partial p}{\partial y}+G_y+f_y \ldots\ldots\ldots 2.7$$

$$\frac{\partial w}{\partial t}+\frac{1}{V_F}\left(uA_x\frac{\partial w}{\partial x}+vA_y\frac{\partial w}{\partial y}+wA_z\frac{\partial w}{\partial z}\right)=-\frac{1}{\rho}\frac{\partial p}{\partial z}+G_z+f_z \ldots\ldots 2.8$$

It is supplemented by the mass conservation equation:

$$\frac{\partial u}{\partial x}A_X+\frac{\partial v}{\partial y}A_y+\frac{\partial w}{\partial z}A_z=0 \ldots\ldots\ldots\ldots\ldots\ldots\ldots\ldots\ldots\ldots\ldots\ldots 2.9$$

2.3.1 Multi-Phase and Turbulence Model:

Volume of fluid (VOF) method is surface tracking technique. This model designed for the case of two or more immiscible fluids (i.e. able to mix) where the position of the interphase between fluids are of interest (ANSYS FLUENT help) the VOF model was used for tracking liquid-gas (water and air) interphase. FLUENT provided several turbulence models that can solves the multiphase systems with a different number of transport equations. In this study standard k-e model was used based on the following equations:

$$\frac{\partial(\rho k)}{\partial t} + \frac{\partial(\rho k u_i)}{\partial x_i} = \frac{\partial}{\partial x_j}\left[\left(\mu + \frac{\mu_t}{\sigma_k}\right)\frac{\partial k}{\partial x_j}\right] + G_k + G_b - \rho\varepsilon - Y_M \ldots\ldots\ldots\ldots\ldots\ldots 2.10$$

$$\frac{\partial(\rho \varepsilon)}{\partial t} + \frac{\partial(\rho \varepsilon u_i)}{\partial x_i} = \frac{\partial}{\partial x_i}\left[\left(\mu + \frac{\mu_t}{\sigma_\varepsilon}\right)\frac{\partial \varepsilon}{\partial x_j}\right] + C_{1\varepsilon}\frac{\varepsilon}{k}(G_k + C_{3\varepsilon}\, G_b) - C_{2\varepsilon}\,\rho\frac{\varepsilon^2}{k} \ldots. \; 2.11$$

The eddy viscosity is completed by combining k and ε as follows:

$$\mu_t = \rho C_\mu \frac{k^2}{\varepsilon} \ldots\ldots\ldots\ldots\ldots$$

CHAPTER 3: METHODOLOGY OF STUDY

3.1 INTRODUCTION:

The present chapter describes the experimental works that done in the literature then the implementations of numerical modelling of flow through pipe was examined by ANSYS-FLUENT code.

3.2 METHODOLOGY OF THE STUDY:

EXPERIMENTAL DATA

3.2.1 MAJOR LOSS TEST APPARATUS

The apparatus consists of three pipes with G.I pipe, Brass pipe, Stainless Steel pipe, all of 12.7 mm diameter, so that loss of head can be compared for different materials. A flow control valve is provided at outlet of pipes which enables experiments to be conducted at different flow rates, i.e. at different velocities.

EXPERIMENTAL OBSERVATION

1. Galvanize iron (G.I) PIPE

Length of pipe = 1m

Diameter of pipe = 12.7 mm

Table (3-1) (OBSERVATION FOR GI PIPE)

No. of run	Velocity (m/sec)	Reynold number Moody chart	e/D relative roughness (moody chart)	Frictional factor from moody chart
1	**2.56**	**36024**	**0.0012**	**0.027**
2	**3.96**	**55725**	**0.0012**	**0.025**
3	**4.61**	**64872**	**0.0012**	**0.024**

Table (3-2) (ABSOLUTE ROUGNESS OF PIPE MATERIALS)

MATERIALS	ABSOLUTE ROUGHNESS (mm)
Galvanized Iron	**0.015**
Stainless Steel	**0.015**
Brass	**0.0015**

At 25˚ C, kinematic viscosity (m^2/sec)= $\mathbf{0.9025 \times 10^{-6}}$

3.3 ANSYS FLUENT 17.0:

ANSYS, Inc. is an engineering simulation software (computer-aided engineering, or CAE) developer that uses CFD, FEM and other various programming algorithms for simulation and optimization.

In this study, ANSYS FLUENT was used to analyze the flow in pipes. This software follows 5 steps for completion of any project.

They are as follows:-

3.3.1 Creating Geometry

First step is modelling of the material to be analyzed. In this study, a pipe of 12.7 mm diameter and 1m length is modeled by using FLUENT code which interfaced on the ANSYS (17.2) software as shown in fig. (3.1).

.

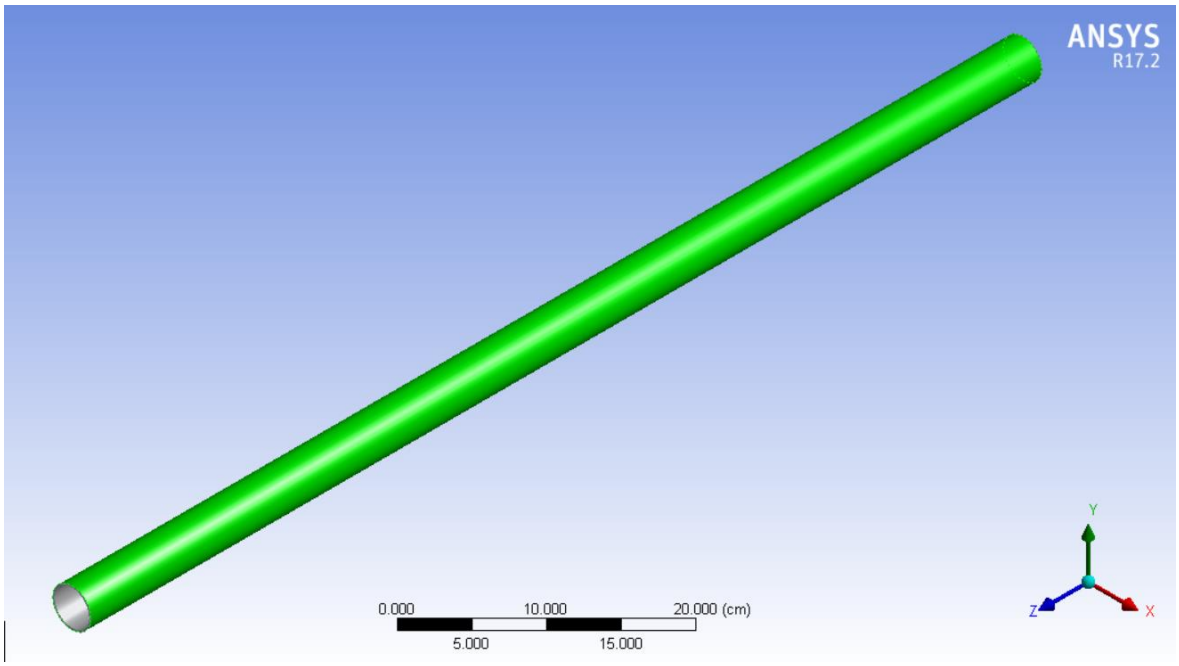

Figure (3.1) Geometry of pipe

3.3.2 Defining Mesh

The model is meshed to get the properties accurately. Meshing means diving the model in numerous smaller equivalent parts so that analysis becomes easier. Analysis is done for every meshed area and the summation of all the areas shows the total property gradient of the model. One can control the meshing by choosing different properties of mesh like size of mesh area, meshing style, mesh thickness etc. Following figure illustrates a meshed model of the pipe used.

In the present study, the sweep mesh method used to calculate mesh grids throughout a fluid domain as shown in Fig. (3.2). Mesh size should be fine enough to ensure the flow features spread out through all fields. For this purpose, maximum size of grids and maximum face size was examined to be 0.002m as a better mesh density when results compared with existing experimental data. High smoothing option of sizing was turned on and "approximately and curvature " of advanced size function was selected.

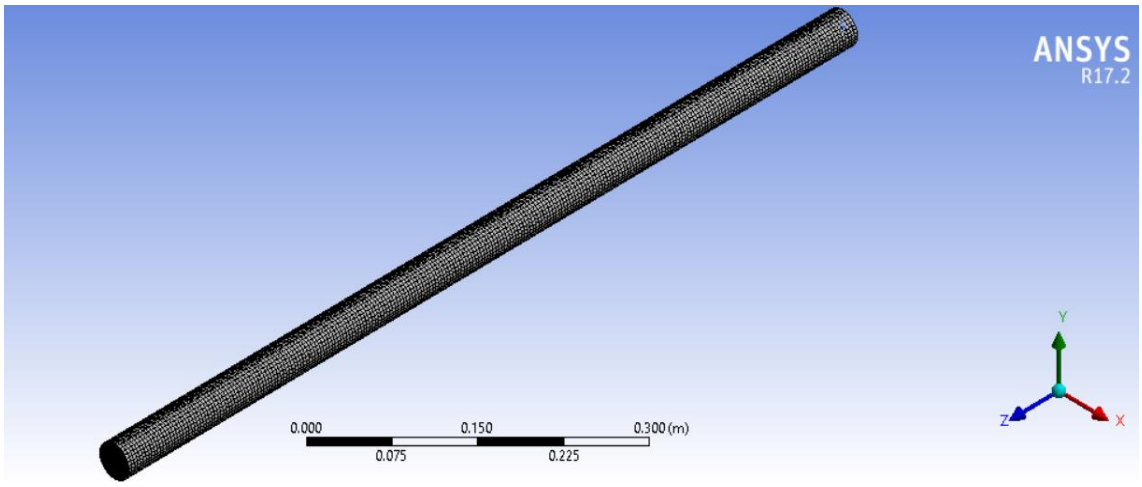

Figure (3.2) Mesh defining of rectangular channel and broad crested weir

3.3.3 Inflation layer

Providing a suitable inflation method for the sweep mesh geometry is strongly tied to the choice of the turbulence model, and the flow field we are interested in capturing. We can elect to resolve the complete profile of the boundary layer of alternatively we can make use of empirical wall functions to reduce the cell count as shown in figure (3.3). If we refer to the images below, on the left hand side we observe that the boundary layer profile is modelled with a reduced cell count, which is characteristic of a wall function approach. On the right, the boundary layer profile is resolved all the way to the wall. This will provide a more accurate resolution of the boundary layer. For certain simulations such as flows with strong wall-bounded effects, this resolution is absolutely necessary.

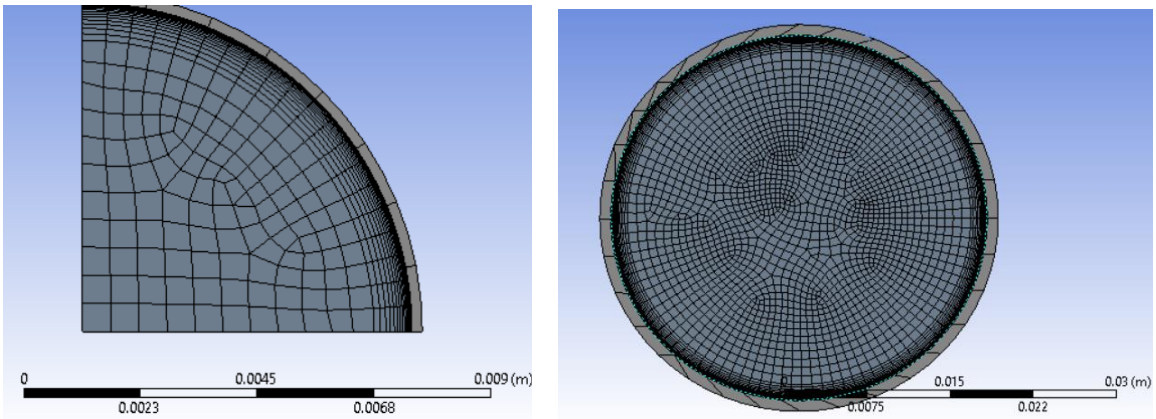

Figure (3.3) inflation layer near wall of pipe

3.3.4 Setting Boundary Conditions

The boundary conditions at different positions are explained below and shown in fig. (3.4):

- Inlet boundary was defined at the inlet section where water flows only into the pipe with a known inlet magnitude of inlet velocity that measured from the experiments.
- Outlet boundary was defined at the downstream sections where fluid from the domain is exited out. Also unit return flow volume fraction was putted.
- Fluid domain: describe as the fluid part in pipe geometry .help us to chose different type of fluid passing through the pipe.
- pipe wall: describe as the solid part in pipe geometry . Which let us to indicate and choose the type of pipe such as iron, steel ,or brass pipe.
- Symmetric 1 and symmetric two .

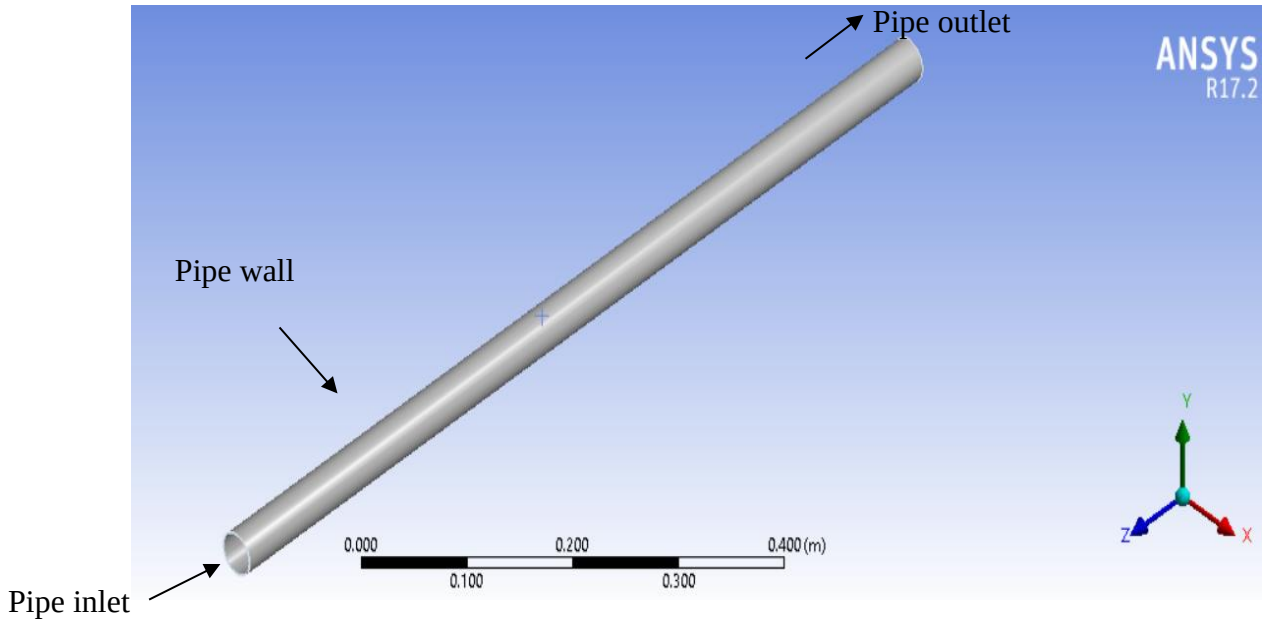

Figure (3.4) Locations of boundary conditions

For the current boundaries, k and epsilon was selected as a specification method for inlet and outlet boundaries, finite volume equations were solved through methods of body force weighted for pressure and second order upwind scheme for mass, momentum and turbulence models.

3.4 FLUX REPORT:

Mass imbalance was one of the important criteria for assessing the convergence criteria. The solver flux report showed the differences in mass flow rates at inlet and outlet boundary of the main channel. The balance result will not exactly be zero, but it should be a small fraction of the net flux through whole domain which displayed in term of (kg/s).

- **Net mass flow rate =$3.95*10^{-3}$**

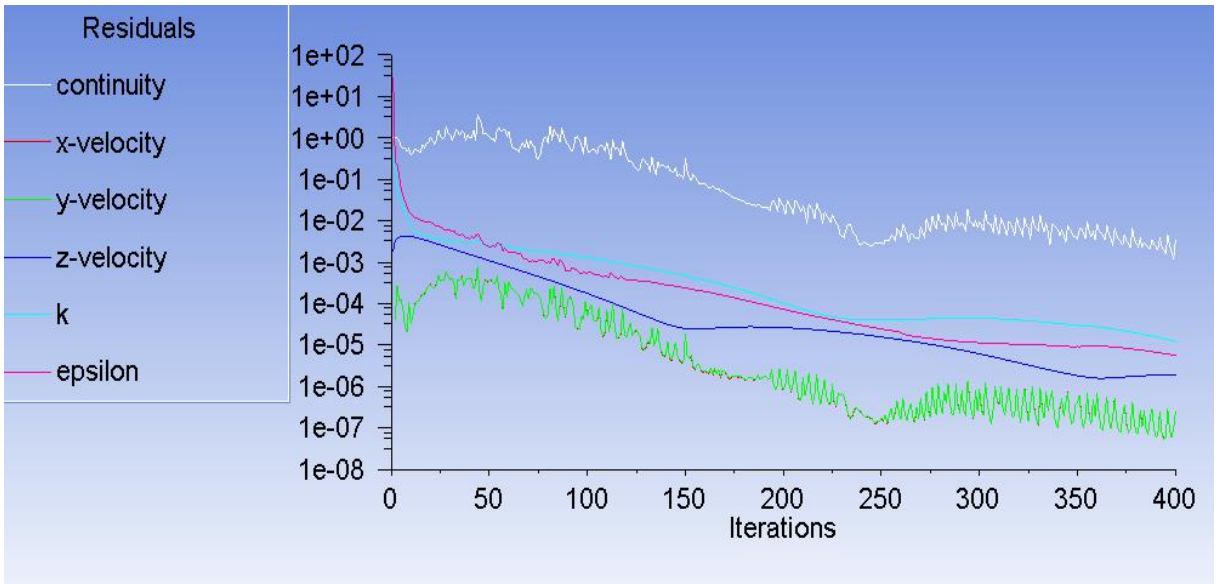

Figure (3.5) Residual window and mass balance results

CHAPTER 4: RESULTS AND DISCUSSION

4.1 INTRODUCTION:

4.1.1 solution

This step involves feeding all prerequisite data such as pipe roughness, inlet velocity, type of flow, type of fluid, flow percentage, initializing the flow, number of iterations etc. Once the data are provided, calculation is done and immediately the iteration begins. When all the points converge, the calculation stops.

4.1.2 result

After solution step, result step includes obtaining the results like pressure difference at inlet and outlet, net pressure in the pipe, outlet velocity etc. These results are used to calculate loss in the pipe and subsequently friction coefficient.

4.1.3 report

This is the final step of a project in ANSYS which helps in displaying the property gradients of the model such as velocity, total pressure, static pressure, shear, eddy viscosity in form of contours, streamline or particle motion form.

4.2 Calculation of loss using ANSYS FLUENT 17.2:

A model of 1m length and 12.7mm diameter is drawn. The model is one quadrant of the pipe.

- Name selection is done, i.e. inlet, outlet, pipe wall, fluid domain , sym 1, sym 2
- The flow is taken to be turbulent, number of iteration 300.
- Inlet velocity, pipe material, fluid type are set accordingly.
- After running calculation, iteration begins and convergences at a point.
- Pressure difference between the inlet and outlet of the pipe is shown by the software.
- Using Darcy Weisbach’s equation, head loss and coefficient of friction is calculated

4.3 OBSERVATION:

Table (4.1) OBSERVATION FROM ANSYS

FLUID	MATERIAL	FRICTIONAL COEFFICIENT
WATER	GALVANIZED IRON	0.021
WATER	STAINLESS STEEL	0.02
WATER	BRASS	0.021
DIESEL	GALVANIZED IRON	0.029
DIESEL	STAINLESS STEEL	0.026
DIESEL	BRASS	0.027
CRUDE OIL	GALVANIZED IRON	0.12
CRUDE OIL	STAINLESS STEEL	0.11
CRUDE OIL	BRASS	0.15

4.4 VELOCITY OF PRESSURE RPOFILE:

Following figures show the velocity and pressure gradients through the pipe. Fluids considered are water, diesel and crude oil and pipe materials are brass, galvanized iron and stainless steel.

4.4.1 GALVANIZED IRON PIPE

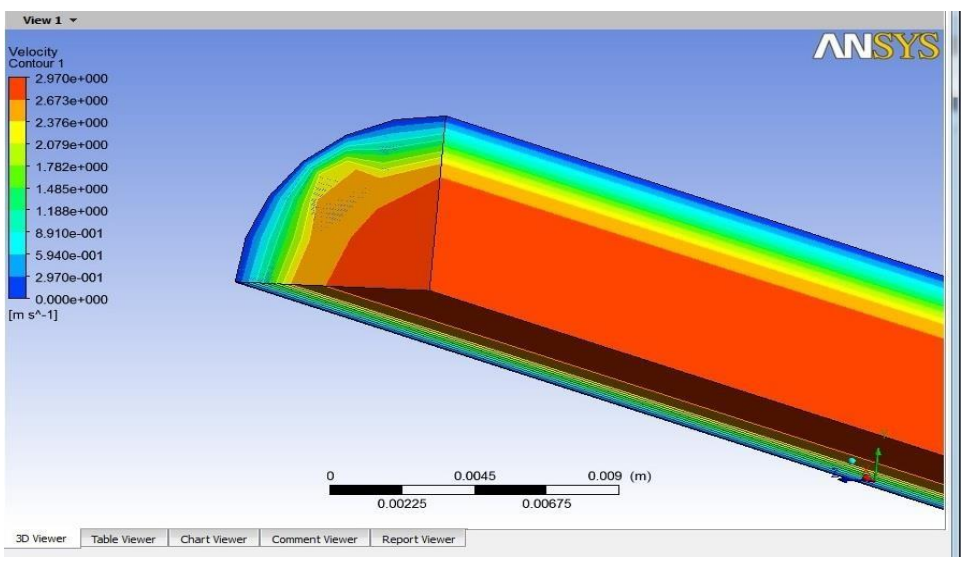

Figure (4.1) Velocity profile for water

The inlet velocity is 2.56m/sec and the fluid used is water. The figure shows that the velocity is maximum at the centre of the pipe. Maximum velocity observed is 2.97m/sec and minimum velocity 0 at the pipe wall.

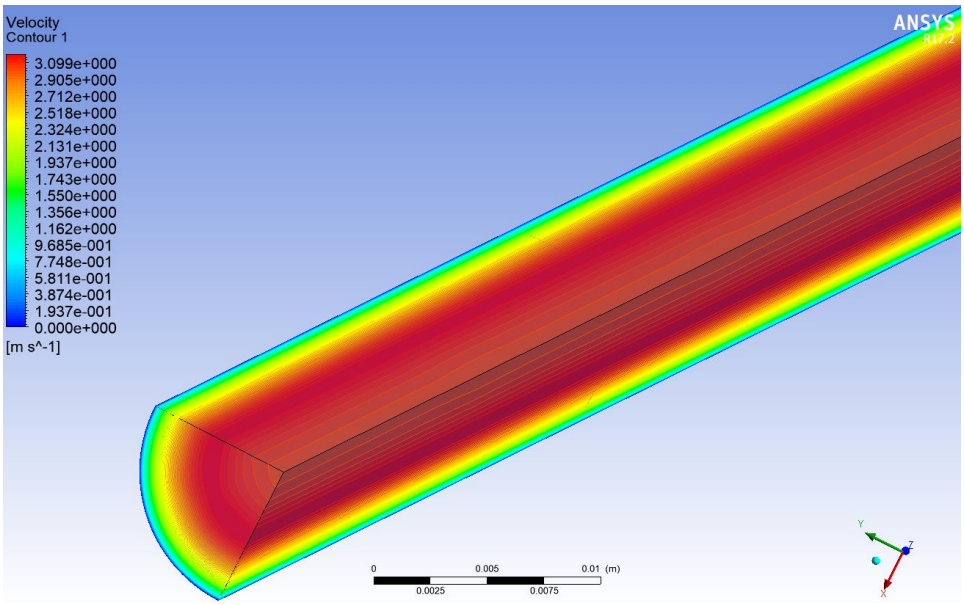

Figure (4.2) Velocity contour for diesel

Inlet velocity is 2.56 m/sec and head loss is much higher than that observed in water. Maximum velocity is 3.099 m/sec and minimum is 0 at the walls.

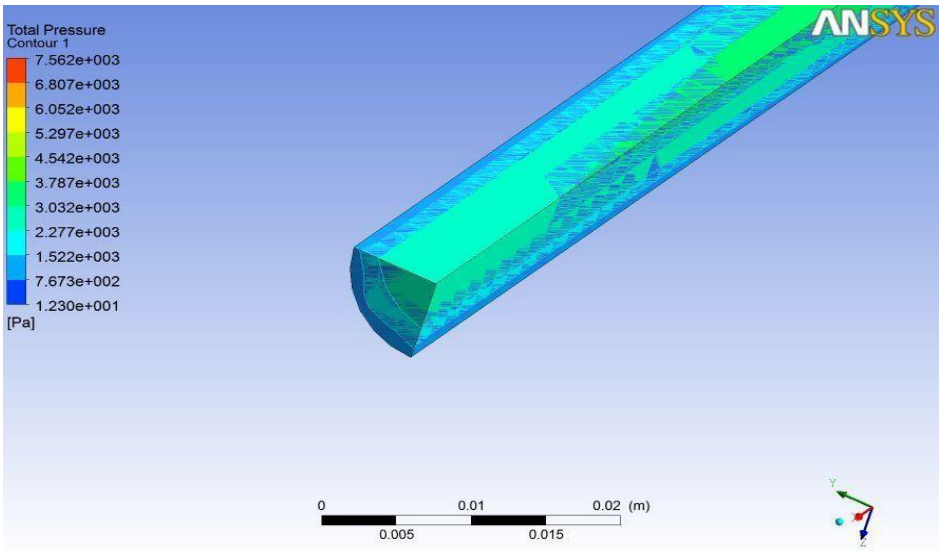

Figure (4.3) Total pressure contour for diesel

Total pressure contour illustrates that the pressure is very high with respect to that observed in water and thus diesel flow experiences more energy loss. Maximum pressure is 7.562 KPa and minimum is 1.23 Pa.

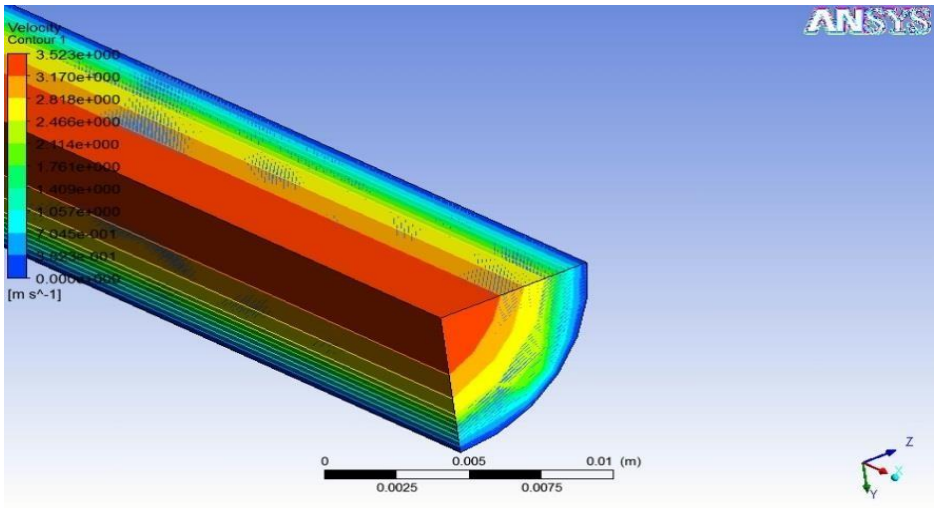

Figure (4.4) Velocity contour for kerosene

Maximum velocity observed in the pipe is 3.52 m/sec and minimum velocity 0 at the walls. Inlet velocity is taken as 2.56 m/sec.

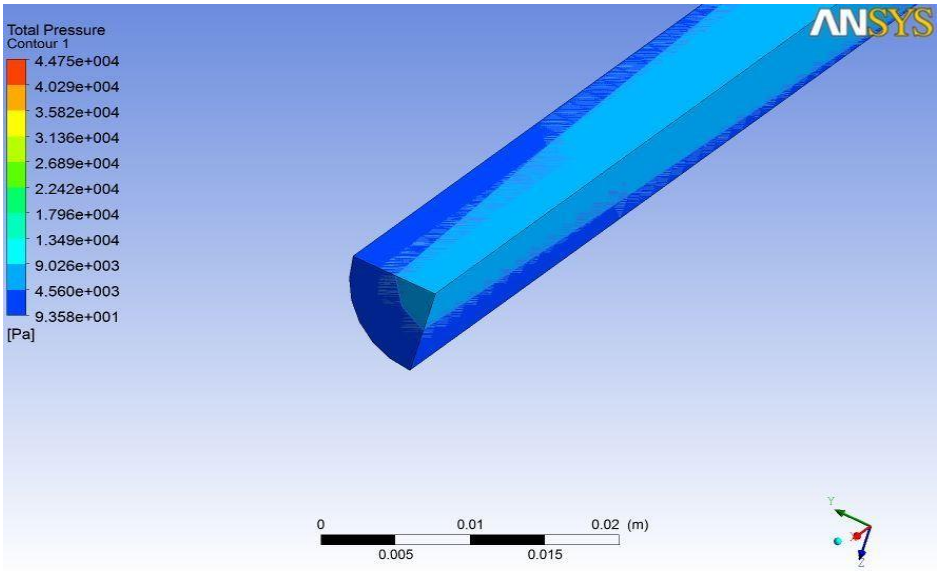

Figure (4.5) Total pressure contour for kerosene

Pressure exerted by crude oil is maximum ranging from 4.475 KPa to 9.35 Pa. This is due to high viscosity of crude oil. Energy loss is maximum for crude oil.

4.4.2 BRASS PIPE

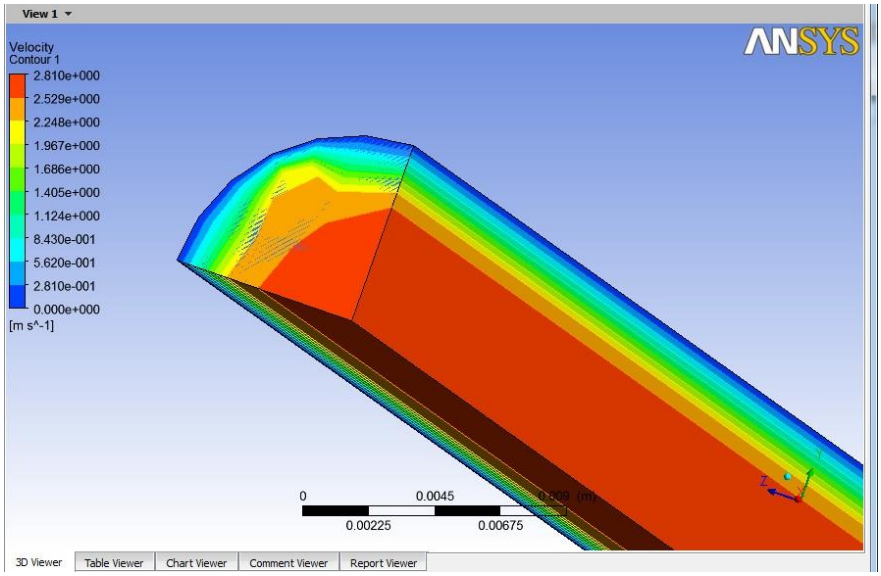

Figure (4.6) Velocity contour for water

Above figure shows the velocity profile for water with inlet velocity of 2.42 m/sec. Maximum velocity observed is 2.81 m/sec and minimum is 0 at the walls. Loss of energy incase of Brass pipe is more than compared to G.I Pipe.

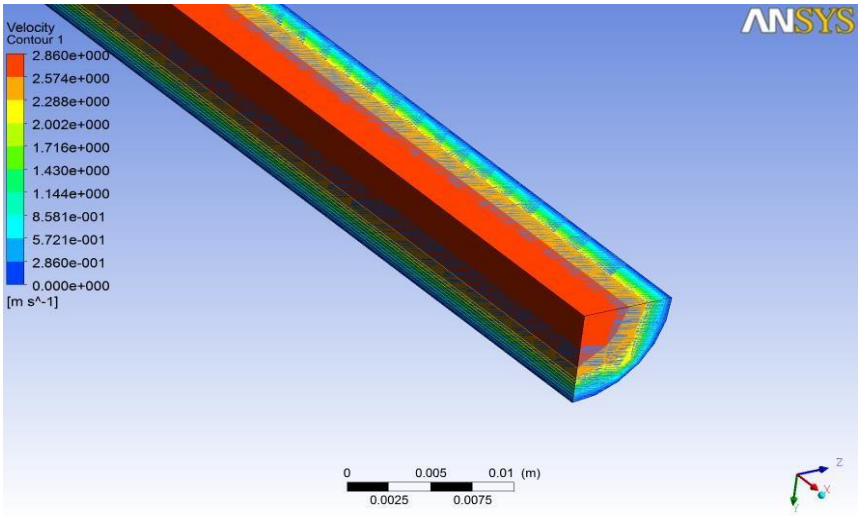

Figure (4.7) Velocity contour for diesel

As compared to water, the loss is more in case of diesel because of its high viscosity. For inlet velocity of 2.42 m/sec, maximum velocity is 2.86 m/sec and minimum is 0 at the walls.

As compared to liquid ammonia and water, the loss is more in case of diesel because of its high viscosity. For inlet velocity of 2.42 m/sec, maximum velocity is 2.86 m/sec and minimum is 0 at the walls.

For an inlet velocity of 2.42 m/sec, the maximum velocity and minimum velocity were 3.34 m/sec and 0 respectively. Energy loss is maximum in case of crude oil flow.

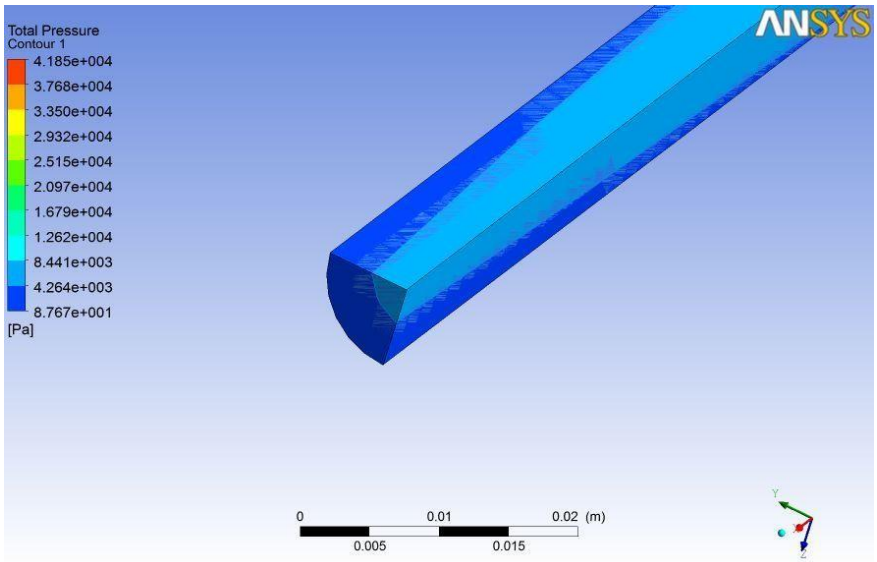

Figure (4.8) total pressure contour for kerosene

4.4.3 STAINLESS STEEL

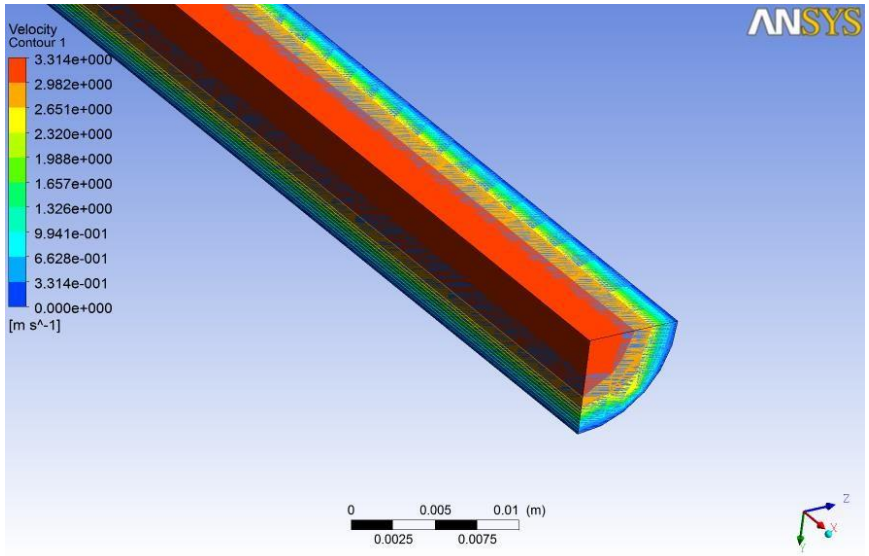

Figure (4.9) Velocity contour for diesel

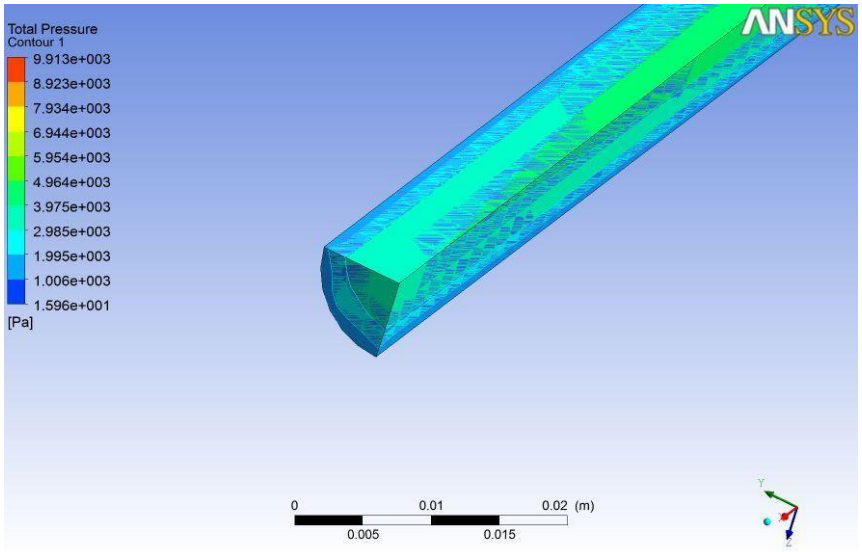

Figure (4.10) Total Pressure contour for diesel

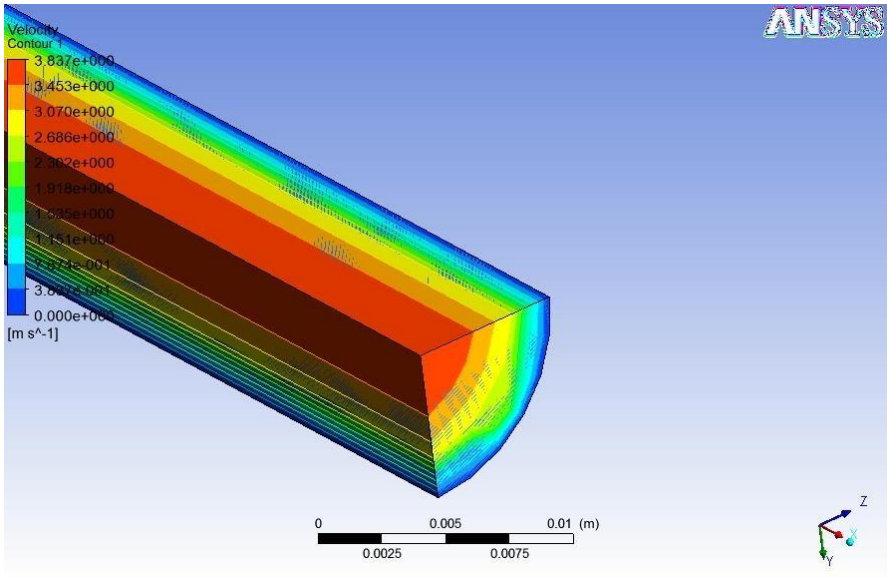

Figure (4.11) Velocity contour for kerosene

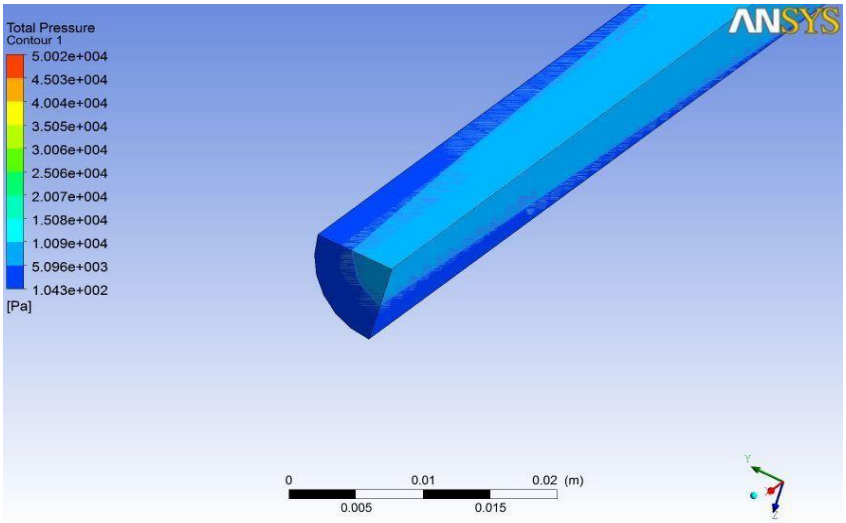

Figure (4.12) Total Pressure contour for kerosene

RESULTS

1. THEORETICAL RESULTS (FLUID – WATER)

Friction coefficient for GI pipe = 0.025

Friction coefficient for Brass pipe = 0.024

Friction coefficient for stainless steel pipe = 0.022

2. ANSYS RESULTS

FLUID – WATER

Friction coefficient for GI pipe = 0.021

Friction coefficient for Brass pipe = 0.021

Friction coefficient for stainless steel pipe = 0.02

FLUID – DIESEL

Friction coefficient for GI pipe = 0.028

Friction coefficient for Brass pipe = 0.0278

Friction coefficient for Stainless Steel pipe = 0.02

FLUID – CRUDE OIL

Friction coefficient for GI pipe = 0.121

Friction coefficient for Brass pipe = 0.14

Friction coefficient for Stainless Steel pipe = 0.114

CHAPTER 5: CONCLUSIONS AND RECOMMENDATION

5.1 CONCLUSIONS:

The project shows that the more viscous the fluid more is the frictional coefficient and thus higher the frictional loss. Thus, crude oil gives the experiences the maximum loss, followed by diesel, followed by water Frictional loss majorly depends upon the viscosity ofthe fluid than the pipe material. Loss observed is maximum for a G.I pipe, followed by Brass pipeand minimum in Stainless Steel pipe. Also, it is observed that increase in velocity decreases the frictional loss as the shear generated between wall and the fluid is less.

APPENDIX

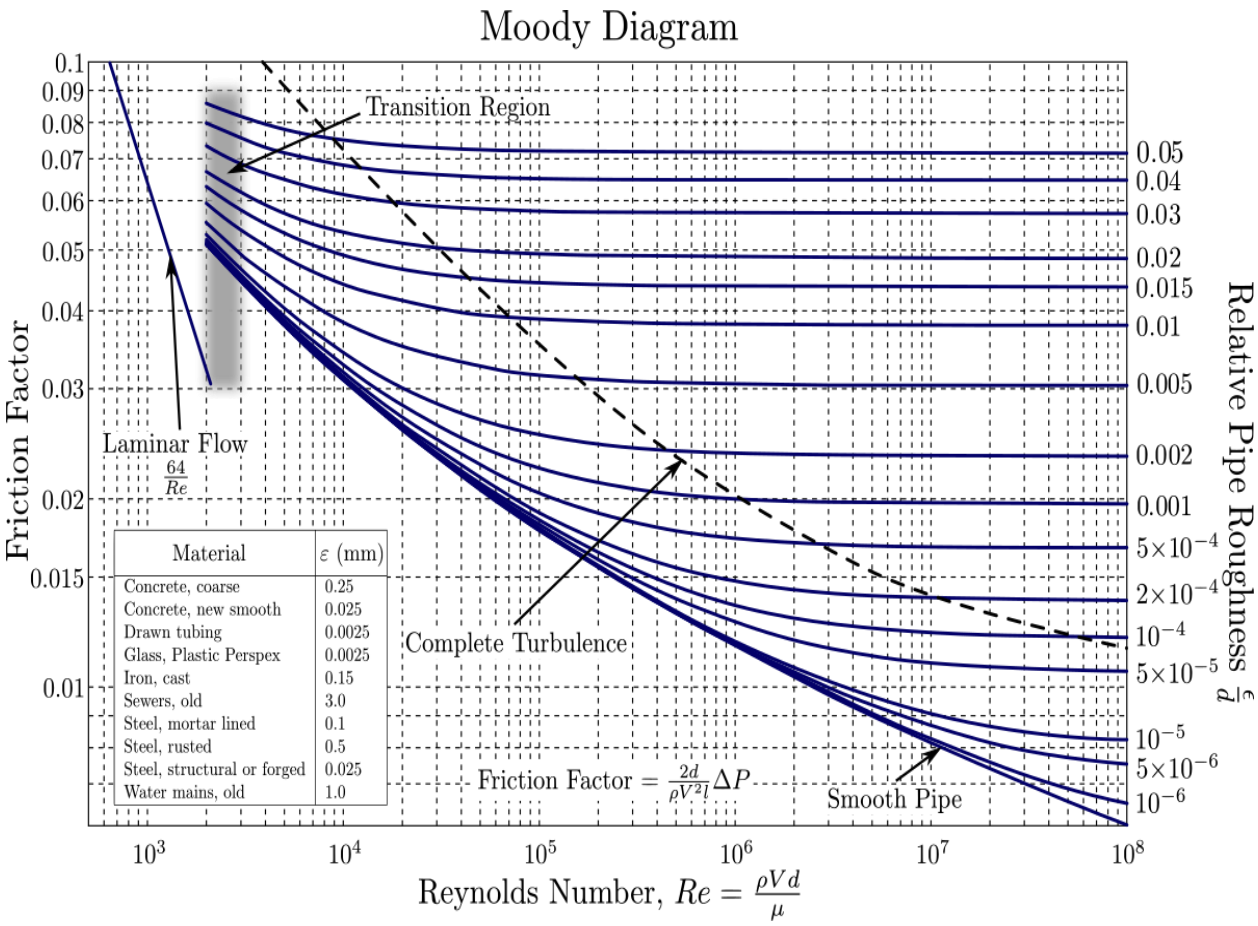

Material	ε (mm)
Concrete, coarse	0.25
Concrete, new smooth	0.025
Drawn tubing	0.0025
Glass, Plastic Perspex	0.0025
Iron, cast	0.15
Sewers, old	3.0
Steel, mortar lined	0.1
Steel, rusted	0.5
Steel, structural or forged	0.025
Water mains, old	1.0

REFERENCES

1. ANSYS FLUENT 17.0, tutorial guide (2010). Certified to ISO 9001: 2010 and ANSYS FLUENT 17.0, Solver and theory helps.

2. Desai, R. and Patil, L. (2015). "Performance Comparison of Various Labyrinth Side Weirs' ', International Journal of Application or Innovation in Engineering & Management (IJAIEM), 4 (6), p.68-73.

3. Bansal R.K. ,(2010). Fluid mechanics and hydraulic machines. Laxmi publication (p) ltd

4. Abdulwahhaba Mohammed, Injetib N K, Dakhilc Sadoun Fahad, "Numerical prediction of pressure loss of fluid in a T junction" IJEE, 4(2), 253-264,(2012).

5. Anderson JD (1995) Computational Fluid Dynamics - The Basics with Applications, McGraw-Hill

6. saswat sambit (2014) "Simulation and flow analysis through a straight pipe" A THESIS SUBMITTED IN PARTIAL FULFILLMENT OF THE REQUIREMENTS FOR THE DEGREE OF Bachelor of Technology In Civil Engineering.